sales@murada.co.id
www.murada.co.id

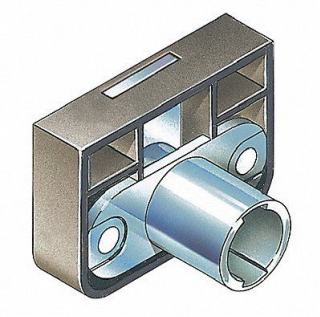

COMPX TIMBERLINE Remov Core Plug Dead Bolt Locks Blk Sq, 5ELE6

Item **31SED16234** Mfr. Model **C280CB**

Product Details

Item Reference: **5ELE6**	Width (in): **1**
Brand: **COMPX TIMBERLINE**	Height (in): **1**
Weight (lb): **0.09**	Harmonization Code: **8301300060**
Length (in): **5**	

Product Description

Lock Style Drawer Lock Type Dead Bolt