sales@murada.co.id
www.murada.co.id

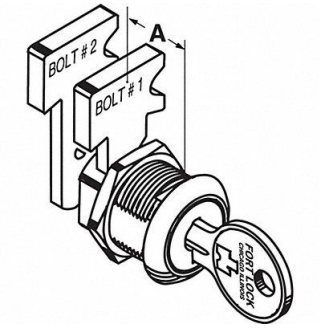

COMPX FORT Cabinet and Drawer Dead Bolt Locks Silvr, 4TXV9

Item **31AJP16188** Mfr. Model **MFW23010KD**

Product Details

Item Reference: **4TXV9**	Width (in): **3**
Brand: **COMPX FORT**	Height (in): **1**
Weight (lb): **0.15**	Harmonization Code: **8301406030**
Length (in): **5**	

Product Description

Lock Style Drawer Lock Type Dead Bolt Opens With Key Key Type Different Stainless Steel Finish