sales@murada.co.id
www.murada.co.id

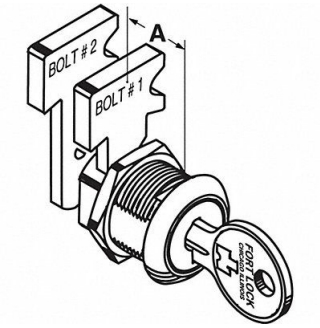

COMPX FORT Cabinet and Drawer Dead Bolt Locks Silvr, 4TXW1

Item **31AJP16187** Mfr. Model **MFW23010217**

Product Details

Item Reference: **4TXW1**	Width (in): **3**
Brand: **COMPX FORT**	Height (in): **1**
Weight (lb): **0.17**	Harmonization Code: **8301406030**
Length (in): **4.5**	

Product Description

Lock Style Drawer Lock Type Dead Bolt Opens With Key Key Type Alike Stainless Steel Finish