sales@murada.co.id
www.murada.co.id

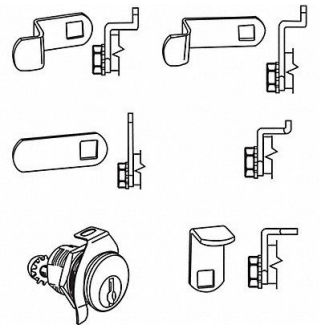

GRAINGER APPROVED Lock Kit For 4C Pedestal Mailboxes, 451K48

Item **31NVR7211** Mfr. Model **9775**

Product Details

Item Reference: **451K48**	Width (in): **2**
Brand: **GRAINGER APPROVED**	Height (in): **1.3**
Weight (lb): **0.225**	Harmonization Code: **3925200091**
Length (in): **3**	

Product Description

Mailbox Lock Kit For Use With 4C Pedestal Mailboxes Features NA14 Keyway Includes 5 Cams