sales@murada.co.id
www.murada.co.id

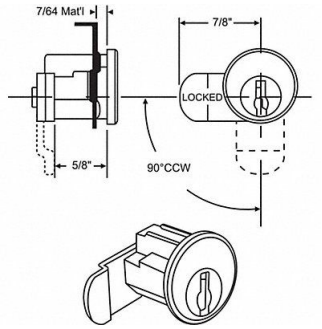

GRAINGER APPROVED Mailbox Lock For 4C Pedestal Mailboxes, 451K34

Item **31NVR7210** Mfr. Model **978**

Product Details

Item Reference: **451K34**	Width (in): **1.4**
Brand: **GRAINGER APPROVED**	Height (in): **1.4**
Weight (lb): **0.14**	Harmonization Code: **3925200091**
Length (in): **3**	

Product Description

Mailbox Lock For Use With 4C Pedestal Mailboxes Features Series C8718 Offset Cam HL1 Keyway