sales@murada.co.id
www.murada.co.id

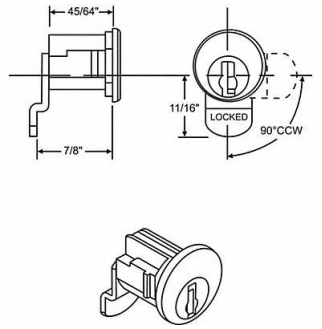

GRAINGER APPROVED Mailbox Lock For 4C Pedestal Mailboxes, 451K32

Item **31NVR7209** Mfr. Model **973**

Product Details

Item Reference: **451K32**	Width (in): **1.5**
Brand: **GRAINGER APPROVED**	Height (in): **1**
Weight (lb): **0.14**	Harmonization Code: **3925200091**
Length (in): **2.5**	

Product Description

Mailbox Lock For Use With 4C Pedestal Mailboxes Features Series C8712 Offset Cam HL1 Keyway