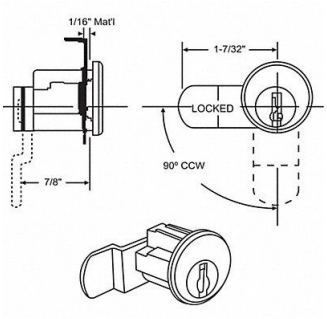

GRAINGER APPROVED Mailbox Lock For 4C Pedestal Mailboxes, 451K31

Item **31NVR7208** Mfr. Model **9776**

Product Details

Item Reference: **451K31**	Width (in): **2.4**
Brand: **GRAINGER APPROVED**	Height (in): **1**
Weight (lb): **0.125**	Harmonization Code: **3925200091**
Length (in): **2.6**	

Product Description

Mailbox Lock For Use With 4C Pedestal Mailboxes Features Series C8710 Offset Cam NA14 Keyway