sales@murada.co.id
www.murada.co.id

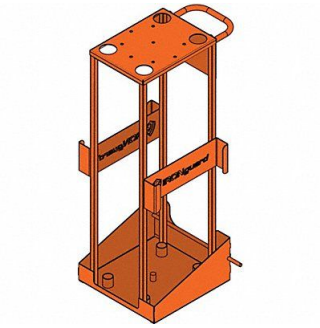

IDEAL WAREHOUSE INNOVATIONS INC. Barrier System Cart Orange 52 in Base H, 49EL03

Item **31EHR2728** Mfr. Model **706037**

Product Details

Item Reference: **49EL03**	Width (in): **30**
Brand: **IDEAL WAREHOUSE INNOVATIONS INC.**	Height (in): **60**
Weight (lb): **190**	Harmonization Code: **8716905060**
Length (in): **30**	

Product Description

Barrier System Cart Color Orange Belt Message None Base Type Foot Pad For Ground Insertion Base Dia 27 in Base Height 52 in Base Material Steel For Use With Portable Safety Zone