sales@murada.co.id
www.murada.co.id

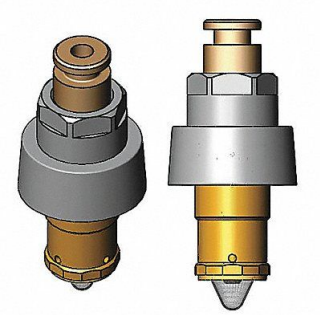

T S BRASS Metering Cartridge, 4XKL7

Item **22ENJ4355** Mfr. Model **238A**

Product Details

Item Reference: **4XKL7**	Width (in): **3.4**
Brand: **T S BRASS**	Height (in): **4.9**
Weight (lb): **0.6**	Harmonization Code: **8481809050**
Length (in): **4.3**	

Product Description

Metering Cartridge Fits Brand T S Brass Finish Chrome For Use With Mfr Model Number B-0712 B-0800 B-0805 B-0805-VR-VF05 B-0831 B-0831-VF05 B-1029 B-2360-01 B-2991 Use With Water Temp Hot/Cold