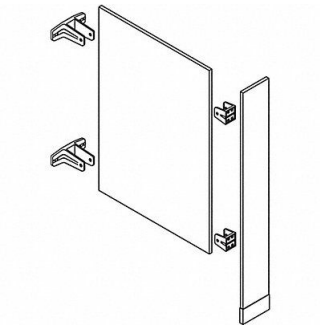

GRAINGER APPROVED Urinal Partition w/Column Cream 7 in W, 7YP93

Item **22NVR0511** Mfr. Model **7YP93**

Product Details

Item Reference: **7YP93**	Width (in): **1**
Brand: **GRAINGER APPROVED**	Height (in): **1**
Weight (lb): **67.15**	Harmonization Code: **3925900000**
Length (in): **1**	

Product Description

Urinal Screen Component Type Urinal with Pilaster Material Solid Plastic Polymer Overall Width 7 in Overall Height 70 in Includes Mounting Hardware Yes Color Cream Includes Components Hardware Resistance Properties Theft Resistant Mounting Type Wall and Column Anchored Finish Pebble Overall Depth 24 in Product Type Urinal Partition Compartments