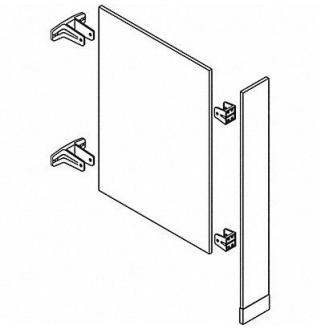

GRAINGER APPROVED Urinal Partition w/Column Gray 7 in W, 7YP89

Item **22NVR0510** Mfr. Model **7YP89**

Product Details

Item Reference: **7YP89**	Width (in): **1**
Brand: **GRAINGER APPROVED**	Height (in): **1**
Weight (lb): **54.06**	Harmonization Code: **7326908610**
Length (in): **1**	

Product Description

Urinal Screen Component Type Urinal with Pilaster Material Baked Enamel Steel Overall Width 7 in Overall Height 70 in Includes Mounting Hardware Yes Color Gray Includes Components Hardware Resistance Properties Theft Resistant Mounting Type Wall and Column Anchored Finish Powder Coated Overall Depth 24 in Product Type Urinal Partition Compartments