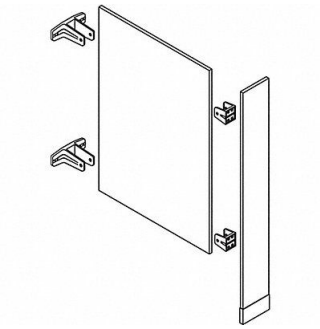

GRAINGER APPROVED Urinal Partition w/Column Khaki 7 in W, 7AW91

Item **22NVR0504** Mfr. Model **7AW91**

Product Details

Item Reference: **7AW91**	Width (in): **1**
Brand: **GRAINGER APPROVED**	Height (in): **1**
Weight (lb): **63.06**	Harmonization Code: **3925900000**
Length (in): **1**	

Product Description

Urinal Screen Component Type Urinal with Pilaster Material Baked Enamel Steel Overall Width 7 in Overall Height 70 in Includes Mounting Hardware Yes Color Khaki Includes Components Hardware Resistance Properties Theft Resistant Mounting Type Wall and Column Anchored Finish Powder Coated Overall Depth 36 in Product Type Urinal Partition Compartments