sales@murada.co.id
www.murada.co.id

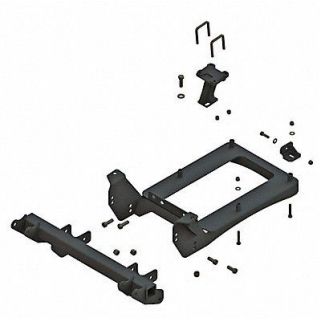

FISHER Mounting Kit Steel Black 23 L 11-1/2 H, 55JK72

Item **20EGJ3961** Mfr. Model **35162**

Product Details

Item Reference: **55JK72**	Width (in): **27.5**
Brand: **FISHER**	Height (in): **11.5**
Weight (lb): **45**	Harmonization Code: **8430200060**
Length (in): **23**	

Product Description

Mounting Kit For Use With UTV Vehicles Material Steel Black Height 11 1/2 in Length 23 in Width 27 1/2 in Includes Control Hardware Literature Power Harness