sales@murada.co.id
www.murada.co.id

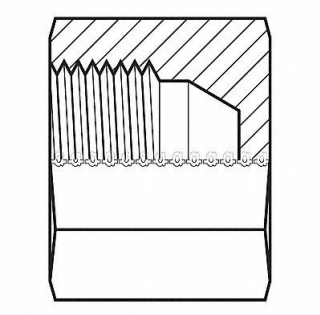

ADAPTALL Hose Adapter 42 mm Metric, 55DU40

Item **12HMQ4205** Mfr. Model **923242**

Product Details

Item Reference: **55DU40**	Width (in): **6**
Brand: **ADAPTALL**	Height (in): **3**
Weight (lb): **1.25**	Harmonization Code: **7307995045**
Length (in): **8**	

Product Description

Hydraulic Hose Adapter 2 500 psi For Hose Type Hydraulic Steel 12L14 12L15