sales@murada.co.id
www.murada.co.id

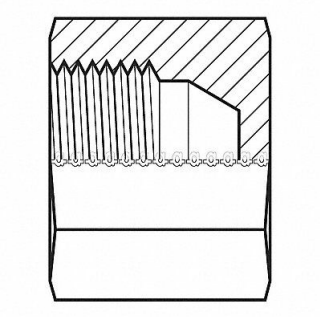

ADAPTALL Hose Adapter 14 mm Metric, 55DU33

Item **12HMQ4198** Mfr. Model **923214**

Product Details

Item Reference: **55DU33**	Width (in): **1**
Brand: **ADAPTALL**	Height (in): **1**
Weight (lb): **0.1**	Harmonization Code: **7307995045**
Length (in): **1.9**	

Product Description

Hydraulic Hose Adapter 4 500 psi For Hose Type Hydraulic Steel 12L14 12L15