sales@murada.co.id
www.murada.co.id

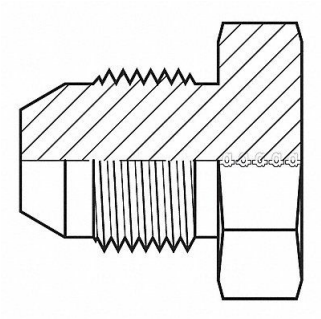

ADAPTALL Hose Adapter 33 mm Metric, 55DU32

Item **12HMQ4197** Mfr. Model **923133**

Product Details

Item Reference: **55DU32**	Width (in): **6**
Brand: **ADAPTALL**	Height (in): **1**
Weight (lb): **0.6**	Harmonization Code: **7307995045**
Length (in): **8**	

Product Description

Hydraulic Hose Adapter 2 500 psi For Hose Type Hydraulic Carbon Steel 12L14 12L15