sales@murada.co.id
www.murada.co.id

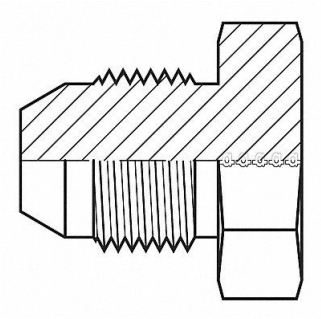

ADAPTALL Hose Adapter 24 mm Metric, 55DU30

Item **12HMQ4195** Mfr. Model **923124**

Product Details

Item Reference: **55DU30**	Width (in): **6**
Brand: **ADAPTALL**	Height (in): **1**
Weight (lb): **0.25**	Harmonization Code: **7307995045**
Length (in): **8**	

Product Description

Hydraulic Hose Adapter 3 500 psi For Hose Type Hydraulic Carbon Steel 12L14 12L15