sales@murada.co.id
www.murada.co.id

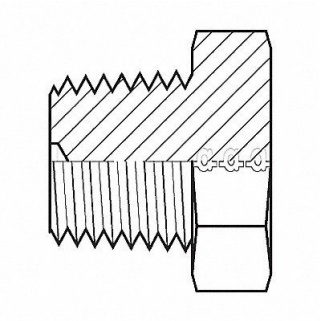

ADAPTALL Hose Adapter 2 BSPT, 55DT43

Item **12HMQ4180** Mfr. Model **9030T32**

Product Details

Item Reference: **55DT43**	Width (in): **6**
Brand: **ADAPTALL**	Height (in): **3**
Weight (lb): **1.7**	Harmonization Code: **7318158085**
Length (in): **8**	

Product Description

Hydraulic Hose Adapter 2 000 psi For Hose Type Hydraulic Carbon Steel 12L14 12L15