sales@murada.co.id
www.murada.co.id

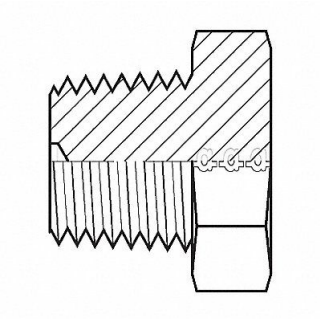

ADAPTALL Hose Adapter 1 BSPT, 55DT40

Item **12HMQ4177** Mfr. Model **9030T16**

Product Details

Item Reference: **55DT40**	Width (in): **6**
Brand: **ADAPTALL**	Height (in): **2**
Weight (lb): **0.6**	Harmonization Code: **7318158085**
Length (in): **8**	

Product Description

Hydraulic Hose Adapter 3 500 psi For Hose Type Hydraulic Carbon Steel 12L14 12L15