sales@murada.co.id
www.murada.co.id

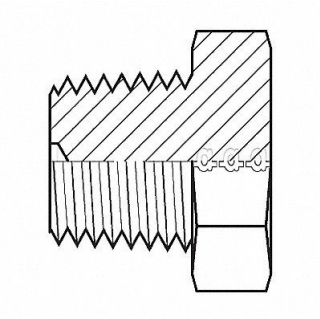

# ADAPTALL Hose Adapter 1/2 BSPT, 55DT37

Item **12HMQ4174** Mfr. Model **9030T08**

## Product Details

| | |
|---|---|
| Item Reference: **55DT37** | Width (in): **6** |
| Brand: **ADAPTALL** | Height (in): **1** |
| Weight (lb): **0.2** | Harmonization Code: **7318158085** |
| Length (in): **8** | |

## Product Description

Hydraulic Hose Adapter 4 000 psi For Hose Type Hydraulic Carbon Steel 12L14 12L15