sales@murada.co.id
www.murada.co.id

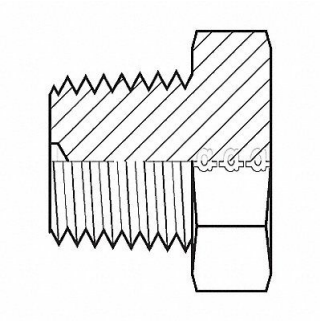

ADAPTALL Hose Adapter 3/8 BSPT, 55DT36

Item **12HMQ4173** Mfr. Model **9030T06**

Product Details

Item Reference: **55DT36**	Width (in): **6**
Brand: **ADAPTALL**	Height (in): **1**
Weight (lb): **0.1**	Harmonization Code: **7318158085**
Length (in): **8**	

Product Description

Hydraulic Hose Adapter 4 000 psi For Hose Type Hydraulic Carbon Steel 12L14 12L15