sales@murada.co.id
www.murada.co.id

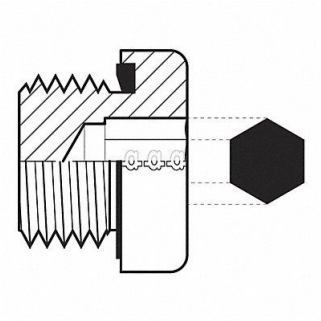

ADAPTALL Hose Adapter 16 mm Metric, 55DT01

Item **12HMQ4138** Mfr. Model **902916x15**

Product Details

Item Reference: **55DT01**	Width (in): **0.9**
Brand: **ADAPTALL**	Height (in): **0.9**
Weight (lb): **0.07**	Harmonization Code: **7307995045**
Length (in): **0.9**	

Product Description

Hydraulic Hose Adapter 4 000 psi For Hose Type Hydraulic Carbon Steel 12L14 12L15