sales@murada.co.id
www.murada.co.id

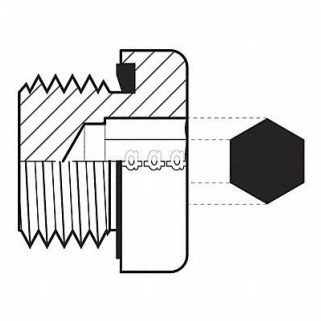

ADAPTALL Hose Adapter 14 mm Metric, 55DR99

Item **12HMQ4137** Mfr. Model **902914x15**

Product Details

Item Reference: **55DR99**	Width (in): **0.8**
Brand: **ADAPTALL**	Height (in): **0.8**
Weight (lb): **0.045**	Harmonization Code: **7307995045**
Length (in): **0.8**	

Product Description

Hydraulic Hose Adapter 4 000 psi For Hose Type Hydraulic Carbon Steel 12L14 12L15