sales@murada.co.id
www.murada.co.id

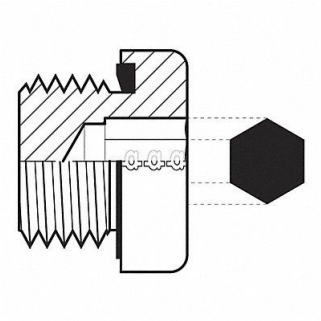

ADAPTALL Hose Adapter 12 mm Metric, 55DR98

Item **12HMQ4136** Mfr. Model **902912x15**

Product Details

Item Reference: **55DR98**	Width (in): **1.1**
Brand: **ADAPTALL**	Height (in): **1.1**
Weight (lb): **0.05**	Harmonization Code: **7307995045**
Length (in): **1.1**	

Product Description

Hydraulic Hose Adapter 4 000 psi For Hose Type Hydraulic Carbon Steel 12L14 12L15