sales@murada.co.id
www.murada.co.id

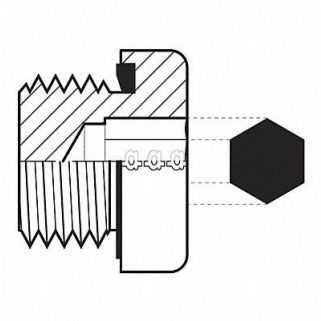

ADAPTALL Hose Adapter 10 mm Metric, 55DR97

Item **12HMQ4135** Mfr. Model **902910x10**

Product Details

Item Reference: **55DR97**	Width (in): **0.6**
Brand: **ADAPTALL**	Height (in): **0.6**
Weight (lb): **0.03**	Harmonization Code: **7307995045**
Length (in): **0.6**	

Product Description

Hydraulic Hose Adapter 5 000 psi For Hose Type Hydraulic Carbon Steel 12L14 12L15