sales@murada.co.id
www.murada.co.id

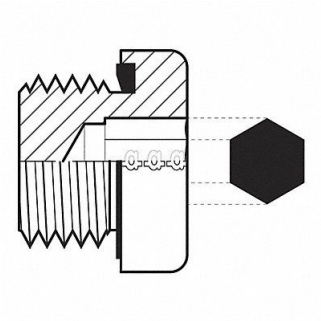

ADAPTALL Hose Adapter 8 mm Metric, 55DR96

Item **12HMQ4134** Mfr. Model **902908x10**

Product Details

Item Reference: **55DR96**	Width (in): **0.4**
Brand: **ADAPTALL**	Height (in): **0.4**
Weight (lb): **0.02**	Harmonization Code: **7307995045**
Length (in): **0.8**	

Product Description

Hydraulic Hose Adapter 5 000 psi For Hose Type Hydraulic Carbon Steel 12L14 12L15