sales@murada.co.id
www.murada.co.id

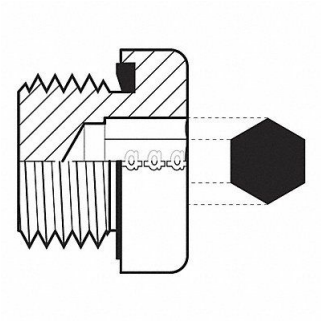

ADAPTALL Hose Adapter 1-1/2 BSPP, 55DR95

Item **12HMQ4133** Mfr. Model **902824**

Product Details

Item Reference: **55DR95**	Width (in): **6**
Brand: **ADAPTALL**	Height (in): **3**
Weight (lb): **0.58**	Harmonization Code: **7307995045**
Length (in): **8**	

Product Description

Hydraulic Hose Adapter 2 000 psi For Hose Type Hydraulic Carbon Steel 12L14 12L15