sales@murada.co.id
www.murada.co.id

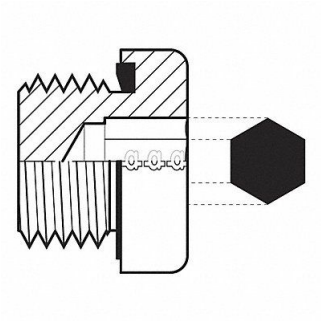

ADAPTALL Hose Adapter 1-1/4 BSPP, 55DR94

Item **12HMQ4132** Mfr. Model **902820**

Product Details

Item Reference: **55DR94**	Width (in): **6**
Brand: **ADAPTALL**	Height (in): **3**
Weight (lb): **0.45**	Harmonization Code: **7307995045**
Length (in): **8**	

Product Description

Hydraulic Hose Adapter 2 500 psi For Hose Type Hydraulic Carbon Steel 12L14 12L15