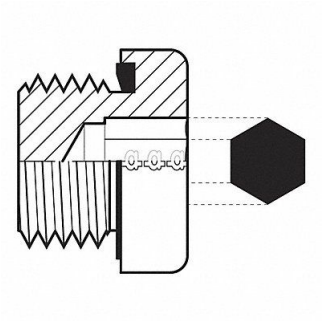

ADAPTALL Hose Adapter 1 BSPP, 55DR93

Item **12HMQ4131** Mfr. Model **902816**

Product Details

Item Reference: **55DR93**	Width (in): **1.6**
Brand: **ADAPTALL**	Height (in): **0.9**
Weight (lb): **0.29**	Harmonization Code: **7307995045**
Length (in): **1.6**	Country of Origin: **China**

Product Description

Hydraulic Hose Adapter 3 500 psi For Hose Type Hydraulic Carbon Steel 12L14 12L15