sales@murada.co.id
www.murada.co.id

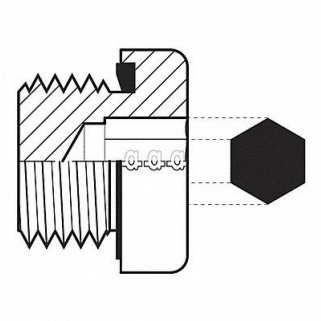

ADAPTALL Hose Adapter 3/4 BSPP, 55DR92

Item **12HMQ4130** Mfr. Model **902812**

Product Details

Item Reference: **55DR92**	Width (in): **1.2**
Brand: **ADAPTALL**	Height (in): **1**
Weight (lb): **0.185**	Harmonization Code: **7307995045**
Length (in): **1.2**	

Product Description

Hydraulic Hose Adapter 4 000 psi For Hose Type Hydraulic Carbon Steel 12L14 12L15