sales@murada.co.id
www.murada.co.id

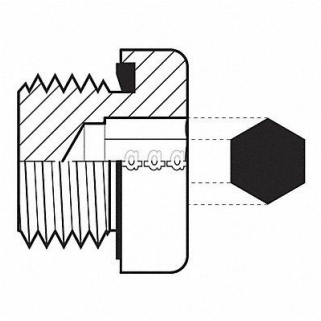

ADAPTALL Hose Adapter 1/2 BSPP, 55DR91

Item **12HMQ4129** Mfr. Model **902808**

Product Details

Item Reference: **55DR91**	Width (in): **1.1**
Brand: **ADAPTALL**	Height (in): **1.1**
Weight (lb): **0.11**	Harmonization Code: **7307995045**
Length (in): **1**	

Product Description

Hydraulic Hose Adapter 4 000 psi For Hose Type Hydraulic Carbon Steel 12L14 12L15