sales@murada.co.id
www.murada.co.id

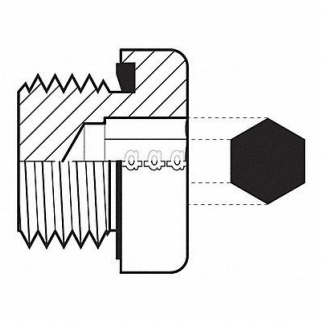

ADAPTALL Hose Adapter 3/8 BSPP, 55DR90

Item **12HMQ4128** Mfr. Model **902806**

Product Details

Item Reference: **55DR90**	Width (in): **0.8**
Brand: **ADAPTALL**	Height (in): **0.8**
Weight (lb): **0.075**	Harmonization Code: **7307995045**
Length (in): **0.9**	

Product Description

Hydraulic Hose Adapter 4 000 psi For Hose Type Hydraulic Carbon Steel 12L14 12L15