sales@murada.co.id
www.murada.co.id

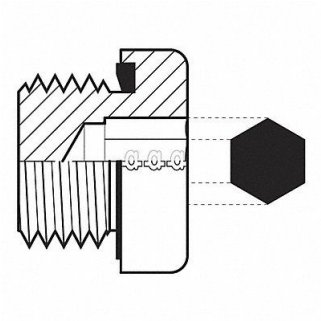

ADAPTALL Hose Adapter 1/4 BSPP, 55DR89

Item **12HMQ4127** Mfr. Model **902804**

Product Details

Item Reference: **55DR89**	Width (in): **0.8**
Brand: **ADAPTALL**	Height (in): **0.8**
Weight (lb): **0.055**	Harmonization Code: **7307995045**
Length (in): **0.8**	

Product Description

Hydraulic Hose Adapter 5 000 psi For Hose Type Hydraulic Carbon Steel 12L14 12L15