sales@murada.co.id
www.murada.co.id

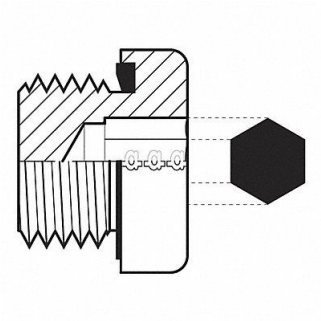

ADAPTALL Hose Adapter 1/8 BSPP, 55DR88

Item **12HMQ4126** Mfr. Model **902802**

Product Details

Item Reference: **55DR88**	Width (in): **0.6**
Brand: **ADAPTALL**	Height (in): **0.6**
Weight (lb): **0.03**	Harmonization Code: **7307995045**
Length (in): **0.6**	

Product Description

Hydraulic Hose Adapter 5 000 psi For Hose Type Hydraulic Carbon Steel 12L14 12L15