sales@murada.co.id
www.murada.co.id

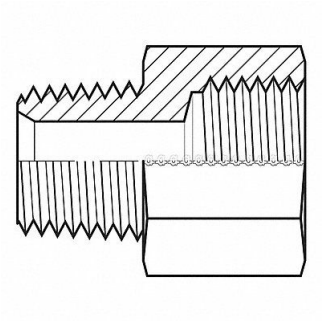

ADAPTALL Hose Adapter 1/4 in x 12 mm Fem.xMale, 55DU96

Item **12HMQ2710** Mfr. Model **93250412x15**

Product Details

Item Reference: **55DU96**	Width (in): **1**
Brand: **ADAPTALL**	Height (in): **1**
Weight (lb): **0.085**	Harmonization Code: **7307995045**
Length (in): **1.3**	

Product Description

Hydraulic Hose Adapter For Hose Type Hydraulic Thread Size 1/4 In.-18 Fitting Shape Straight Rigid Flange Size Not Applicable 5 000 psi Includes O-Ring No Crimpable No Compatible Pipe Size 1/4 in Hose Fitting A Gender Female Hose Fitting B Gender Male Hose Fitting A Size 1/4 in Hose Fitting B Size 12 mm Hose Fitting A Connection Type Metric Hose Fitting B Connection Type NPT Overall Length 1.2 in Fitting Material Carbon Steel x Carbon Steel 12L14 12L15