sales@murada.co.id
www.murada.co.id

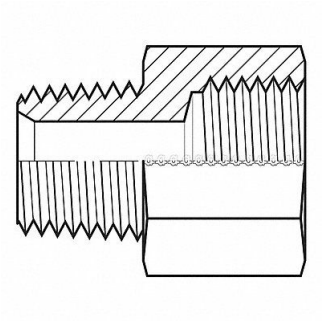

# ADAPTALL Hose Adapter 1/8 NPT 10 mm, 55DU93

Item **12HMQ2707** Mfr. Model **93250210x10**

## Product Details

| | |
|---|---|
| Item Reference: **55DU93** | Width (in): **6** |
| Brand: **ADAPTALL** | Height (in): **1** |
| Weight (lb): **0.1** | Harmonization Code: **7307995045** |
| Length (in): **8** | |

## Product Description

Hydraulic Hose Adapter For Hose Type Hydraulic Thread Size 1/8 In.-27 Fitting Shape Straight Rigid Flange Size Not Applicable 5 000 psi Includes O-Ring No Crimpable No Compatible Pipe Size 1/8 in Hose Fitting A Gender Female Hose Fitting B Gender Male Hose Fitting A Size 1/8 in Hose Fitting B Size 10 mm Hose Fitting A Connection Type Metric Hose Fitting B Connection Type NPT Overall Length 1.04 in Fitting Material Carbon Steel x Carbon Steel 12L14 12L15