sales@murada.co.id
www.murada.co.id

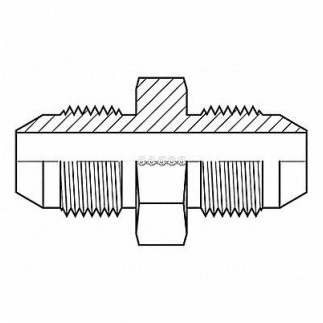

ADAPTALL Hose Adapter 24 mm Metric Metric, 55DU72

Item **12HMQ2686** Mfr. Model **92362424**

Product Details

Item Reference: **55DU72**	Width (in): **6**
Brand: **ADAPTALL**	Height (in): **2**
Weight (lb): **0.3**	Harmonization Code: **7307995045**
Length (in): **8**	

Product Description

Hydraulic Hose Adapter For Hose Type Hydraulic Fitting Shape Straight Rigid Flange Size Not Applicable 3 500 psi Includes O-Ring No Crimpable No Hose Fitting A Gender Male Hose Fitting B Gender Male Hose Fitting A Size 24 mm Hose Fitting B Size M24X1.5 Hose Fitting A Connection Type JIS Hose Fitting B Connection Type JIS Overall Length 1.2 in Fitting Material Carbon Steel x Carbon Steel 12L14 12L15