sales@murada.co.id
www.murada.co.id

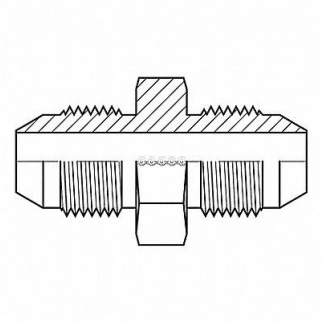

ADAPTALL Hose Adapter 1/8 NPT 22 mm BSPP, 55DU71

Item **12HMQ2685** Mfr. Model **92362222**

Product Details

Item Reference: **55DU71**	Width (in): **6**
Brand: **ADAPTALL**	Height (in): **1**
Weight (lb): **0.25**	Harmonization Code: **7307995045**
Length (in): **8**	

Product Description

Hydraulic Hose Adapter For Hose Type Hydraulic Fitting Shape Straight Rigid Flange Size Not Applicable 4 000 psi Includes O-Ring No Crimpable No Hose Fitting A Gender Male Hose Fitting B Gender Male Hose Fitting A Size 22 mm Hose Fitting B Size 22 mm Hose Fitting A Connection Type JIS Hose Fitting B Connection Type JIS Overall Length 1 in Fitting Material Carbon Steel x Carbon Steel 12L14 12L15