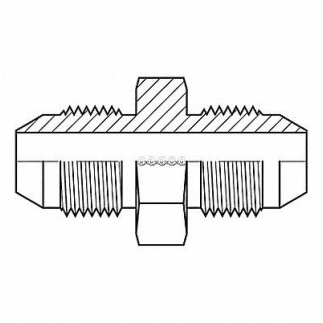

ADAPTALL Hose Adapter 7/8 Metric 14 mm, 55DU70

Item **12HMQ2684** Mfr. Model **92361414**

Product Details

Item Reference: **55DU70**	Width (in): **6**
Brand: **ADAPTALL**	Height (in): **2**
Weight (lb): **0.1**	Harmonization Code: **7307995045**
Length (in): **8**	

Product Description

Hydraulic Hose Adapter For Hose Type Hydraulic Fitting Shape Straight Rigid Flange Size Not Applicable 4 500 psi Includes O-Ring No Crimpable No Hose Fitting A Gender Male Hose Fitting B Gender Male Hose Fitting A Size 14 mm Hose Fitting B Size 14 mm Hose Fitting A Connection Type JIS Hose Fitting B Connection Type JIS Overall Length 1.68 in Fitting Material Carbon Steel x Carbon Steel 12L14 12L15