sales@murada.co.id
www.murada.co.id

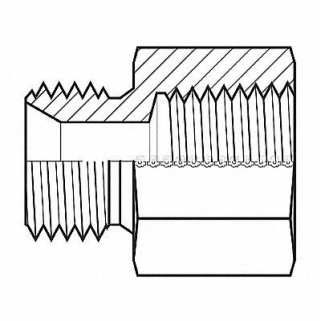

ADAPTALL Hose Adapter 30 mm Metric 3/4 NPT, 55DU67

Item **12HMQ2681** Mfr. Model **92353012**

Product Details

Item Reference: **55DU67**	Width (in): **2**
Brand: **ADAPTALL**	Height (in): **2**
Weight (lb): **0.445**	Harmonization Code: **7307995045**
Length (in): **2**	

Product Description

Hydraulic Hose Adapter For Hose Type Hydraulic Thread Size 3/4 In.-14 Fitting Shape Straight Rigid Flange Size Not Applicable 2 500 psi Includes O-Ring No Crimpable No Hose Fitting A Gender Male Hose Fitting B Gender Female Hose Fitting A Size 30 mm Hose Fitting B Size 3/4 in Hose Fitting A Connection Type Metric Hose Fitting B Connection Type NPT Overall Length 1.7 in Fitting Material Carbon Steel x Carbon Steel 12L14 12L15