sales@murada.co.id
www.murada.co.id

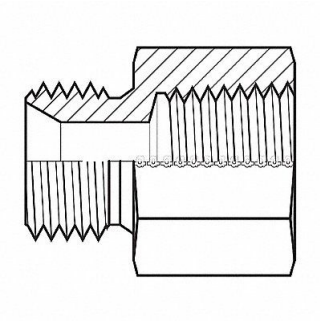

ADAPTALL Hose Adapter 27 mmMetric 3/4 NPT, 55DU66

Item **12HMQ2680** Mfr. Model **92352712**

Product Details

Item Reference: **55DU66**	Width (in): **1.6**
Brand: **ADAPTALL**	Height (in): **1.4**
Weight (lb): **0.455**	Harmonization Code: **7307995045**
Length (in): **2.2**	

Product Description

Hydraulic Hose Adapter For Hose Type Hydraulic Thread Size 3/4 In.-14 Fitting Shape Straight Rigid Flange Size Not Applicable 2 500 psi Includes O-Ring No Crimpable No Hose Fitting A Gender Male Hose Fitting B Gender Female Hose Fitting A Size 27 mm Hose Fitting B Size 3/4 in Hose Fitting A Connection Type Metric Hose Fitting B Connection Type NPT Overall Length 1.7 in Fitting Material Carbon Steel x Carbon Steel 12L14 12L15