sales@murada.co.id
www.murada.co.id

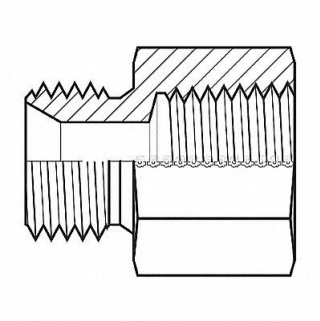

ADAPTALL Hose Adapter 22 mm Metric 3/4 NPT, 55DU62

Item **12HMQ2676** Mfr. Model **92352212**

Product Details

Item Reference: **55DU62**	Width (in): **6**
Brand: **ADAPTALL**	Height (in): **3**
Weight (lb): **0.4**	Harmonization Code: **7307995045**
Length (in): **8**	

Product Description

Hydraulic Hose Adapter For Hose Type Hydraulic Thread Size 3/4 In.-14 Fitting Shape Straight Rigid Flange Size Not Applicable 2 500 psi Includes O-Ring No Crimpable No Hose Fitting A Gender Male Hose Fitting B Gender Female Hose Fitting A Size 22 mm Hose Fitting B Size 3/4 in Hose Fitting A Connection Type Metric Hose Fitting B Connection Type NPT Overall Length 1.5 in Fitting Material Carbon Steel x Carbon Steel 12L14 12L15