sales@murada.co.id
www.murada.co.id

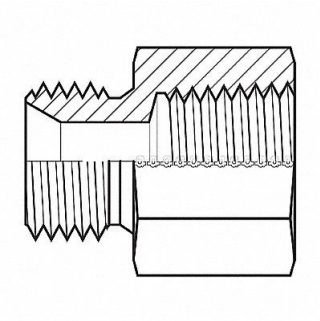

ADAPTALL Hose Adapter 22 mm Metric 3/8 NPT, 55DU61

Item **12HMQ2675** Mfr. Model **92352206**

Product Details

Item Reference: **55DU61**	Width (in): **6**
Brand: **ADAPTALL**	Height (in): **3**
Weight (lb): **0.3**	Harmonization Code: **7307995045**
Length (in): **8**	

Product Description

Hydraulic Hose Adapter For Hose Type Hydraulic Thread Size 1/4 In.-18 Fitting Shape Straight Rigid Flange Size Not Applicable 4 000 psi Includes O-Ring No Crimpable No Hose Fitting A Gender Male Hose Fitting B Gender Female Hose Fitting A Size 22 mm Hose Fitting B Size 3/8 in Hose Fitting A Connection Type Metric Hose Fitting B Connection Type NPT Overall Length 1.2 in Fitting Material Carbon Steel x Carbon Steel 12L14 12L15