sales@murada.co.id
www.murada.co.id

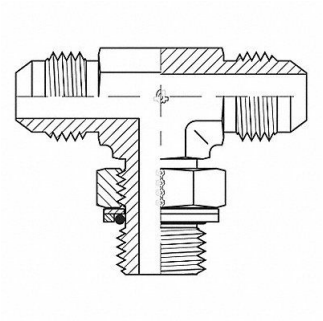

ADAPTALL Hose Adapter 1/4 JIC 1/4 JIC, 55DU20

Item **12HMQ2649** Mfr. Model **9159040404**

Product Details

Item Reference: **55DU20**	Width (in): **6**
Brand: **ADAPTALL**	Height (in): **1**
Weight (lb): **0.15**	Harmonization Code: **7307995045**
Length (in): **8**	

Product Description

Hydraulic Hose Adapter For Hose Type Hydraulic Fitting Shape Tee Rigid Flange Size Not Applicable 4 500 psi Includes O-Ring Yes Crimpable No Hose Fitting A Gender Male Hose Fitting B Gender Male Hose Fitting C Gender Male Hose Fitting A Size 1/4 in Hose Fitting B Size 1/4 in Hose Fitting C Size 1/4 in Hose Fitting A Connection Type JIC Hose Fitting B Connection Type JIC Hose Fitting C Connection Type BSPP Fitting Material Carbon Steel x Carbon Steel x Carbon Steel 12L14 12L15