sales@murada.co.id
www.murada.co.id

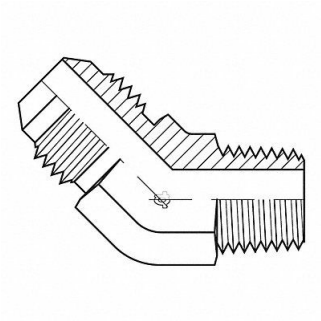

# ADAPTALL Hose Adapter 1-1/4 JIC 1-1/4 BSPT, 55DU13

Item **12HMQ2642** Mfr. Model **90642020**

## Product Details

| | |
|---|---|
| Item Reference: **55DU13** | Width (in): **6** |
| Brand: **ADAPTALL** | Height (in): **3** |
| Weight (lb): **2** | Harmonization Code: **7307995045** |
| Length (in): **8** | |

## Product Description

Hydraulic Hose Adapter For Hose Type Hydraulic Fitting Shape 45 Degrees Elbow Rigid Flange Size Not Applicable 2 000 psi Includes O-Ring No Crimpable No Hose Fitting A Gender Male Hose Fitting B Gender Male Hose Fitting A Size 1 1/4 in Hose Fitting B Size 1 1/4 in Hose Fitting A Connection Type JIC Hose Fitting B Connection Type BSPT Fitting Material Carbon Steel x Carbon Steel 12L14 12L15