sales@murada.co.id
www.murada.co.id

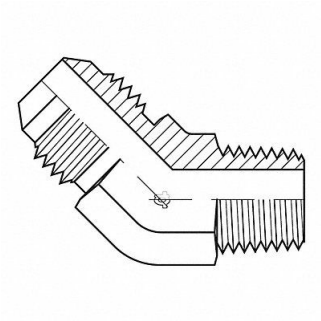

ADAPTALL Hose Adapter 1/4 JIC 1/8 BSPT, 55DU04

Item **12HMQ2633** Mfr. Model **90640402**

Product Details

Item Reference: **55DU04**	Width (in): **0.6**
Brand: **ADAPTALL**	Height (in): **0.6**
Weight (lb): **0.055**	Harmonization Code: **7307995045**
Length (in): **1.6**	

Product Description

Hydraulic Hose Adapter For Hose Type Hydraulic Fitting Shape 45 Degrees Elbow Rigid Flange Size Not Applicable 4 500 psi Includes O-Ring No Crimpable No Hose Fitting A Gender Male Hose Fitting B Gender Male Hose Fitting A Size 1/4 in Hose Fitting B Size 1/8 in Hose Fitting A Connection Type JIC Hose Fitting B Connection Type BSPT Fitting Material Carbon Steel x Carbon Steel 12L14 12L15