sales@murada.co.id
www.murada.co.id

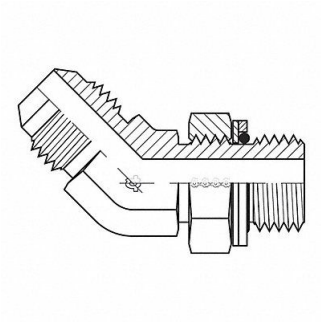

ADAPTALL Hose Adapter 1 JIC 1 BSPP, 55DU03

Item **12HMQ2632** Mfr. Model **90581616**

Product Details

Item Reference: **55DU03**	Width (in): **6**
Brand: **ADAPTALL**	Height (in): **2**
Weight (lb): **0.85**	Harmonization Code: **7307995045**
Length (in): **8**	

Product Description

Hydraulic Hose Adapter For Hose Type Hydraulic Fitting Shape 45 Degrees Elbow Rigid Flange Size Not Applicable 2 500 psi Includes O-Ring Yes Crimpable No Hose Fitting A Gender Male Hose Fitting B Gender Male Hose Fitting A Size 1 in Hose Fitting B Size 1 in Hose Fitting A Connection Type JIC Hose Fitting B Connection Type BSPP Fitting Material Carbon Steel x Carbon Steel 12L14 12L15