sales@murada.co.id
www.murada.co.id

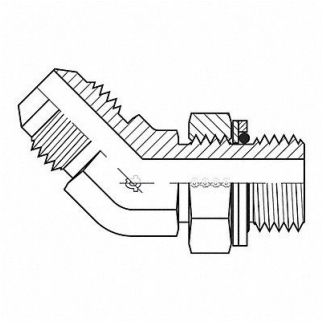

ADAPTALL Hose Adapter 3/8 JIC 1/4 BSPP, 55DT95

Item **12HMQ2625** Mfr. Model **90580604**

Product Details

Item Reference: **55DT95**	Width (in): **1**
Brand: **ADAPTALL**	Height (in): **0.6**
Weight (lb): **0.11**	Harmonization Code: **7307995045**
Length (in): **2.5**	

Product Description

Hydraulic Hose Adapter For Hose Type Hydraulic Fitting Shape 45 Degrees Elbow Rigid Flange Size Not Applicable 4 000 psi Includes O-Ring Yes Crimpable No Hose Fitting A Gender Male Hose Fitting B Gender Male Hose Fitting A Size 3/8 in Hose Fitting B Size 1/4 in Hose Fitting A Connection Type JIC Hose Fitting B Connection Type BSPP Fitting Material Carbon Steel x Carbon Steel 12L14 12L15