sales@murada.co.id
www.murada.co.id

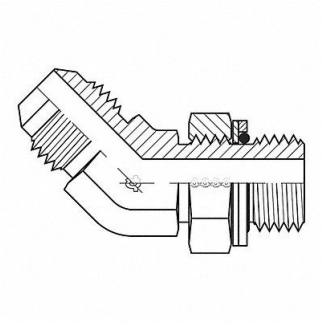

ADAPTALL Hose Adapter 1/4 JIC 1/4 BSPP, 55DT94

Item **12HMQ2624** Mfr. Model **90580404**

Product Details

Item Reference: **55DT94**	Width (in): **1**
Brand: **ADAPTALL**	Height (in): **0.9**
Weight (lb): **0.1**	Harmonization Code: **7307995045**
Length (in): **2.1**	

Product Description

Hydraulic Hose Adapter For Hose Type Hydraulic Fitting Shape 45 Degrees Elbow Rigid Flange Size Not Applicable 4 500 psi Includes O-Ring Yes Crimpable No Hose Fitting A Gender Male Hose Fitting B Gender Male Hose Fitting A Size 1/4 in Hose Fitting B Size 1/4 in Hose Fitting A Connection Type JIC Hose Fitting B Connection Type BSPP Fitting Material Carbon Steel x Carbon Steel 12L14 12L15