sales@murada.co.id
www.murada.co.id

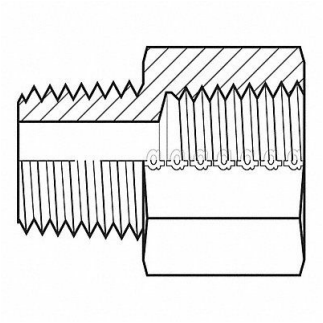

ADAPTALL Hose Adapter 1 BSPT 1 NPT, 55DT85

Item **12HMQ2615** Mfr. Model **90421616**

Product Details

Item Reference: **55DT85**	Width (in): **6**
Brand: **ADAPTALL**	Height (in): **2**
Weight (lb): **0.63**	Harmonization Code: **7307995045**
Length (in): **8**	

Product Description

Hydraulic Hose Adapter For Hose Type Hydraulic Thread Size 1 In.-11-1/2 Fitting Shape Straight Rigid Flange Size Not Applicable 3 500 psi Includes O-Ring No Crimpable No Hose Fitting A Gender Male Hose Fitting B Gender Female Hose Fitting A Size 1 in Hose Fitting B Size 1 in Hose Fitting A Connection Type BSPT Hose Fitting B Connection Type NPT Fitting Material Carbon Steel x Carbon Steel 12L14 12L15